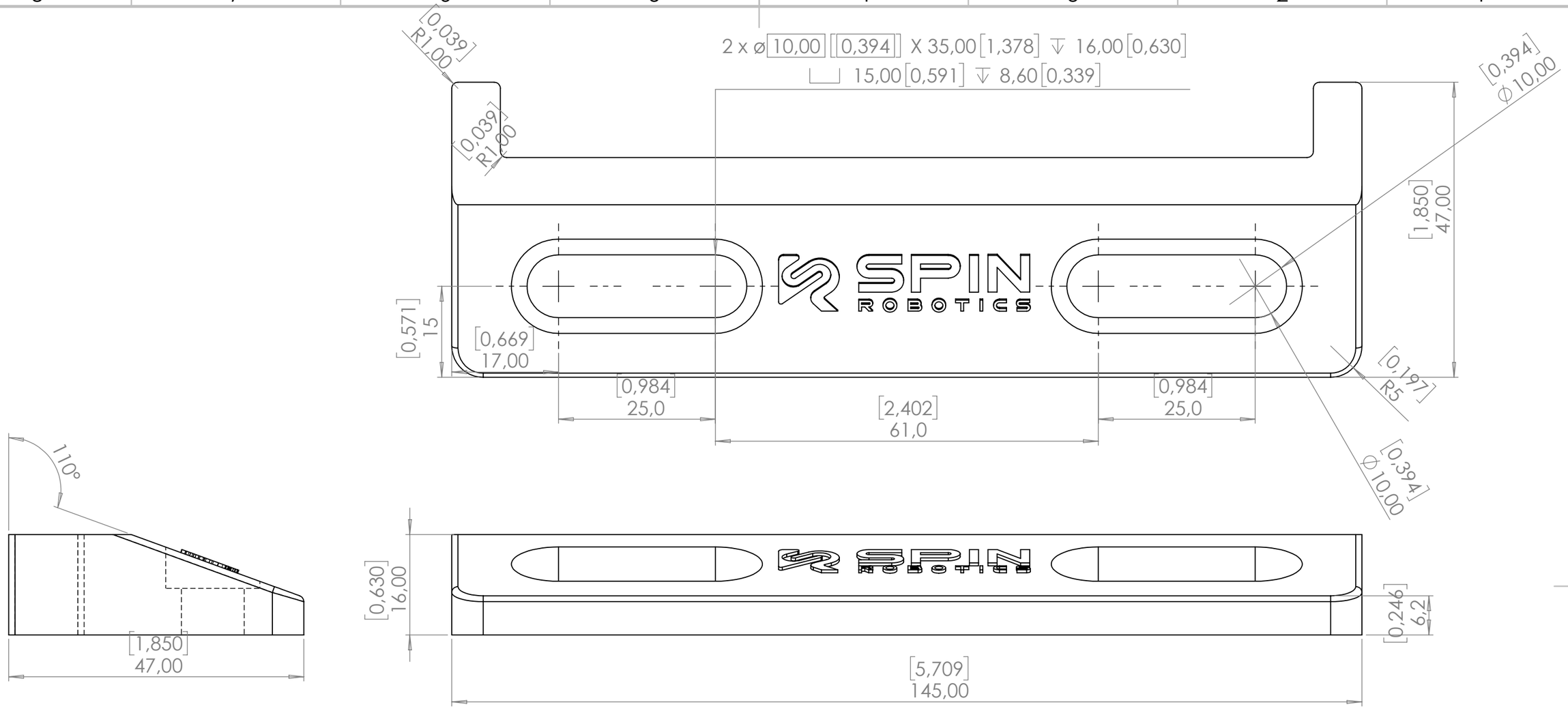

UNLESS OTHERWISE SPECIFIED:
DIMENSIONS ARE IN MILLIMETERS
TOLERANCES: DIN ISO 2768 mk

	MATERIAL: 3D printed matrial
SHEET 1 OF 1	SURFACE FINISH:
SCALE:1:1	DESCRIPTION: Vention Bracket for NJRL
REVISION:	DWG NO. 07-00-0023
SHEET FORMAT: A3	
DATE: 21/11/2024	

SPIN ROBOTICS